Tax Executives Institute – New Orleans Chapter
"2012: A New Year, a Brave New Tax World"
February 1, 2012

Robert S. Chase II
Richard A. Hartnig

Are We There Yet? Tax Reform Proposals and Prospects

SUTHERLAND

www.sutherland.com

Introduction

SUTHERLAND

- "Tax reform" has become an increasingly important topic since the 2010 mid-term elections and the 2012 presidential elections have only increased the focus.
- Shaping the debate: The Obama Administration, members of Congress and Republican presidential hopefuls have introduced a number of plans, all generally involving in some form:
  - Limitation on or elimination of tax deductions and credits at the corporate and individual level.
  - Reduction in corporate tax rate.
  - Overhaul of the international tax system.

Driving the Debate

Driving the Debate: The Hard Facts

SUTHERLAND

- On November 15, 2011, the national debt went over the $15T threshold. As of December 1, 2011, the national debt was $15,088,441,787,407.62.
- The Congressional Budget Office issued a report in March 2011 that included the following statistics and predictions:
  - The amount of the national debt held by the public has almost doubled between FY2007 and FY2010, to over $9T at the end of FY2010. According to the Bureau of Public Debt, the debt held by the public is currently over $10T.
  - In 2010, individual income taxes made up 42% of annual revenue, followed by social insurance taxes (40%), corporate taxes (9%) and other revenues, including excise taxes, estate and gift taxes, etc. (approximately 10%).
  - Without changes to current laws, the national debt will equal 76% of GDP by the end of 2020.
  - Without changes to current laws, over the next 10 years, deficits will total $7T.

Driving the Debate: State of Play

SUTHERLAND

- What are the over-arching policy goals?
  - Job creation
  - Deficit reduction
  - Economic Growth
  - U.S. competitiveness
- Who pays if revenue neutral?
  - Increases in individual income rates – untenable if broad-based.
  - Continuation of Bush tax cuts not feasible without reform.
  - International reform not to be paid out of domestic taxes.

Getting Directions: Simpson-Bowles

SUTHERLAND

- In December 2010, the National Commission on Fiscal Responsibility and Reform introduced a plan focused on discretionary spending cuts and savings related to health care, social security, and other mandatory programs, as well as comprehensive tax reform.
- The tax reform proposals included:
  - Reduce individual income tax rates to 12%, 22%, and 28%. Capital gains and dividends would be taxed at the same rate as ordinary income.
  - Reduce corporate tax rate to between 23%-29% (28% used as example).
  - ADOPT A TERRITORIAL SYSTEM WHERE INCOME EARNED BY FOREIGN SUBSIDIARIES WOULD NOT BE SUBJECT TO U.S. TAX. PASSIVE INCOME FROM FOREIGN SUBSIDIARIES WOULD STILL BE TAXED AS UNDER CURRENT LAW.

Getting Directions: Simpson-Bowles

SUTHERLAND

- The tax reform proposals included (cont.)
  - Eliminate almost all deductions and credits for individuals and corporations.
    - On the individual side, 12% nonrefundable credits for mortgage interest and charitable contributions.
  - Gradually increase federal gas tax by 15 cents.
  - Cap exclusion for employer provided health insurance in 2018 and phase out thereafter.

Getting Directions: “Gang of Six”

SUTHERLAND

- In July 2011, the Senate’s “Gang of Six” (including Democrats Kent Conrad, Dick Durbin, and Mark Warner, and Republicans Mike Crapo, Tom Coburn, and Saxby Chambliss) introduced its plan that was based off of the Bowles-Simpson plan recommendations.
- The tax proposals included:
  - Reduce the number of individual income tax brackets and individual income tax rates to: 8-12%; 14-22%; and 23-29%.
  - Reduce corporate rate to between 23% and 29%.
  - MOVE TO A TERRITORIAL SYSTEM.
  - REFORM, OR ELIMINATE, MOST DEDUCTIONS AND CREDITS.

At the Wheel: The Administration

SUTHERLAND

- As part of his 2012 State of the Union Address, President Obama outlined a proposal for significant tax reforms which are intended to help the middle class and to spur American manufacturing growth.

- Domestic proposals include:
  - Extending payroll tax cuts that are currently set to expire in February.
  - Eliminate certain tax deductions for persons earning more than $250,000.
  - Enforce the “Buffett Rule” (in very general terms, provides that no household with an income of at least $1 million should pay a lower tax rate than the middle class) through a 30% minimum tax rate for those earning more than $1 million.
  - Extend $2,500 education tax credit.

At the Wheel: The Administration

SUTHERLAND

- International proposals designed to spur U.S. manufacturing include:
  - 20% tax credit for companies that move operations back to United States, and elimination of tax deductions for companies moving operations overseas.
  - 9% tax deduction for U.S. manufacturers; 18% deduction for advanced manufacturing technologies that create U.S. jobs.
  - $6 billion in manufacturing tax credits, for investment in communities with excessive job loss.
  - $5 billion in energy tax credits, to drive $20 billion in investments for new clean energy manufacturing.
  - 100% expensing of plant and equipment investments by U.S. manufacturers - providing up to $50 billion over two years in savings for businesses.
  - Eliminate tax loopholes that allow companies to pay less tax by holding profits overseas.
  - Impose a minimum tax on international earnings of U.S. companies.

At the Wheel: The Administration

SUTHERLAND

- Details of the current proposals have not been provided, but some will likely be drawn from the September 2011, Administration proposals that were part of its deficit reduction proposal made to the Deficit Reduction Supercommittee along with a related “Jobs Act.”
  - Plan includes tax increases and spending cuts that are said to reduce the national deficit by approx. $3.2 trillion over the next 10 years.
  - Tax increases make up $1.57 trillion of the $3.2 trillion that the President's proposal is said to produce.
    - $866 billion – Expiration of the 2001 and 2003 tax cuts.
    - $410 billion – Limiting deductions and exclusions for individuals earning more than $200,000 and families earning more than $250,000.
    - $300 billion – Eliminating "special interest tax breaks."
  - In the context of this proposal, the President also touted the so-called "Buffett Rule," which, in very general terms, provides that no household with an income of at least $1 million should pay a lower tax rate than the middle class.

At the Wheel: The Administration

SUTHERLAND

- The $300 billion of revenue referenced in the President's proposal from eliminating "special interest tax breaks" includes the following items:
  - Repealing the LIFO method of tax accounting (scored at approx. $52B over 10 years).
    - Would result in increased taxable income for taxpayers required to change method because older (cheaper) inventory would be taken into account.
    - Would require current LIFO taxpayers to write up inventory to FIFO value in year of change.
    - Proposed to be effective for tax years beginning after Dec. 31, 2012.
  - Repealing lower-of-cost-or-market inventory accounting method (scored at approx. $8B over 10 years).
    - Also would not allow subnormal goods method of accounting.
    - Any resulting income recognized over 4-year period.
    - Proposed to be effective for tax years beginning after Dec. 31, 2012.

At the Wheel: The Administration

SUTHERLAND

- The $300 billion of revenue referenced in the President's proposal from eliminating "special interest tax breaks" also includes the following items:
  - Eliminating oil and gas tax preferences (scored at approx. $41B over 10 years).
  - Reinstating Superfund taxes (scored at approx. $19B over 10 years).
  - Clarifying worker classification rules (scored at approx. $15B over 10 years).
  - Permanently extending the 0.8% unemployment insurance surtax (scored at approx. $15B over 10 years).
  - Taxing carried interests as ordinary income (scored at approx. $13B over 10 years).

At the Wheel: The Administration

SUTHERLAND

- The Administration's proposal also would make significant international tax reforms, including:
  - DEFER DEDUCTION OF INTEREST EXPENSE ALLOCATED TO FOREIGN-SOURCE INCOME (SCORED AT APPROX. $36B OVER 10 YEARS).
    - Deduction would be deferred as long as U.S. tax on the income is deferred.
    - Designed to better match timing of deductions and recognition of foreign source income.
  - DETERMINE FOREIGN TAX CREDITS ON A POOLING BASIS (SCORED AT APPROX. $53B OVER 10 YEARS).
    - Foreign tax credits on receipt of dividends from foreign subsidiaries would be based on the consolidated E&P and foreign taxes of all of foreign subsidiaries.

At the Wheel: The Administration

SUTHERLAND

- The Administration's proposal also would make significant international tax reforms, including:
  - TAX CURRENTLY "EXCESS RETURNS" ASSOCIATED WITH TRANSFERS OF INTANGIBLES OFFSHORE (SCORED AT APPROX. $19B OVER 10 YEARS).
    - Designed to cover where section 482 or the transfer pricing rules might not have prevented income shifting.
    - Excess return from transfer of intangibles offshore where there is "excessive income shifting" from the U.S. would be treated as subpart F income.
  - CLARIFY THE DEFINITION OF INTANGIBLE PROPERTY FOR PURPOSES OF §§ 367(D) AND 482 TO PREVENT INAPPROPRIATE SHIFTING OF INCOME OUTSIDE OF THE UNITED STATES (SCORED AT APPROX. $1B OVER 10 YEARS).

At the Wheel: The Administration

SUTHERLAND

- The Administration's proposal also would make significant international tax reforms, including:
  - LIMIT EARNINGS STRIPPING BY EXPATRIATED ENTITIES (SCORED AT APPROX. $4B OVER 10 YEARS).
    - Revises section 163(j) to limit domestic corporation's deductions of interest payments to "expatriated entities."
    - Carryforward for disallowed interest would be limited to 10 years and carryforward or excess limitation would be eliminated.

At the Wheel: Congressional Republicans

SUTHERLAND

- Congressional Republicans responded to the September 2011 Administration proposals with the Jobs Through Growth Tax Act:
  - Sets maximum individual and corporate tax rates at 25%.
  - **INCLUDES BOTH TEMPORARY AND PERMANENT REPATRIATION INCENTIVES.**
  - **MOVES TO A TERRITORIAL SYSTEM.**
  - Repeals PPACA and Dodd-Frank.

Backseat Drivers: Republican Candidates

SUTHERLAND

- Most of the Republican candidate proposals share common themes, including reducing the corporate tax rate and repealing PPACA and Dodd-Frank.
- Many proposals also include moving to a "territorial system."
  - No clear definition of what a "territorial system" means in practice. Camp is one such proposal. We will go into detail on that proposal as an example.
  - General principal that income should be taxed only once, in the jurisdiction where earned.
  - Intended to remove incentives for U.S. companies to keep profits offshore—generally exempts dividends from foreign subsidiaries from tax—but effectiveness is uncertain.
  - Presents transition issues.

Backseat Drivers: Republican Candidates

SUTHERLAND

- Specific candidate proposals:
  - Mitt Romney - "Fairer, Flatter, Simpler"; reduce corporate tax rate to 25%; move to territorial system; repeal PPACA and Dodd-Frank.
  - Newt Gingrich - "Jobs and Prosperity Plan"; reduce corporate tax rate to 12.5%; allows for 100% expensing of new equipment; repeal PPACA and Dodd-Frank; supports move toward flat tax, and allows for optional flat tax on individuals.
  - Ron Paul – Abolish the IRS and eliminate the income tax.
  - Rick Santorum – Deep tax cuts; no tax on repatriated earnings that are invested in plant or equipment, and 5.25% rate on all other repatriated earnings.

SUTHERLAND

Mapping International Tax Reform: Camp Legislative Proposals

Camp International Proposals

SUTHERLAND

- On October 26, 2011, Chairman Camp released a discussion draft on international tax reform. This proposal is in line with Republican presidential ideas.
  - Lowers the corporate tax rate to 25% (which is intended to be tentative subject to further analysis).
  - Intended to be revenue neutral, and that domestic base broadening should not be used to finance international tax relief, and vice versa.
  - Introduces a participation exemption regime.

Camp International Proposals

SUTHERLAND

- The proposed participation exemption regime generally provides:
  - An 85% (again, tentative) DRD for dividends paid from foreign-source income of a CFC to a U.S. shareholder that:
    - Is a corporation, and
    - Owns 10% or more of "CFC" stock over a one-year holding period.
  - No FTCs (section 901 or section 902) are allowed for dividends that qualify for the DRD.
  - Withholding taxes are not deductible. $100 – 10 = $90 cash; $100 taxed – $95 DRD = $5 taxable income.
  - A U.S. shareholder may elect to treat all 10% owned non controlled foreign companies as CFCs (all or none) on the first tax return in which the 10/50 company is subject to the new law.
    - Absent election, 10/50 companies are treated as portfolio investment (i.e., no sec. 902 credit on 10/50 companies).

Camp International Proposals

SUTHERLAND

- The proposed participation exemption regime generally provides:
  - First-tier foreign branches (including check-the-box branches) are treated as CFCs for all purposes.
    - Section 367 transactions, hard assets are probably exempt, but goodwill may be taxable.
    - Disregarded debt becomes real; sales and Section 304s become real.
  - Capital gains and losses on CFC shares:
    - Gain is 95% exempt if:
      - Ownership and holding period requirements are met, and
      - No more than 30% of assets generate subpart F, FPHC income determined over a three-year testing period.
      - For other gain, Sec. 1248 amount treated as a dividend.
    - Losses are disallowed on shares that would qualify for the 95% DRD if sold at a gain; other losses remain under current law.

Taxation of Qualified Dividend Example

SUTHERLAND

Item	Present law at 35% rate	Camp at 25% rate
Foreign income	100	100
Less: Foreign tax (fairly low tax)	(20)	(20)
E&P	80	80
Dividend	80	80
Less: Withholding tax	(4)	(4)
Net Dividend	76	76
Sec. 78 gross-up	20	N/A
U.S. income inclusion	100	80
DRD (95%)	N/A	(76)
Taxable income after DRD	100	4
U.S. tax before FTC	35	1
Foreign tax credit	(24)	N/A
U.S. Tax After FTC	**11**	**1**

Taxation of Capital Gain Example

SUTHERLAND

Item	Present law at 35% rate	Camp at 25% rate
Shareholder Investment		
FMV of CFC Stock	440	440
Basis in CFC stock	300	300
Accumulated E&P	100	100
Built-in gain	140	140
Foreign tax pool	20	20
Tax On Sec. 1248 Amount		0
Sec. 1248 amount	100	N/A
U.S. income inclusion with Section 78 gross up	120	0
DRD (95%)	N/A	(0)
Taxable income after DRD	120	0
U.S. tax before FTC	42	0
Foreign tax credit	(20)	N/A
U.S. Tax After FTC	**22**	**0**
Tax On Gain		
Gain	40	140
Less than 30% passive	N/A	Yes
Exemption (95%)	N/A	(133)
Taxable Income	40	7
U.S. Tax	**14**	**1.75**

Value of Excess Foreign Tax Credits

SUTHERLAND

- Addressing the loss of foreign tax credits would be significant.
  - Suppose your company had a $100 million excess credit, with $50 million in dividends a year so no valuation allowance.
  - Value of the FTC asset goes down from $35 million to something less, but not clear what that number would be since 10/50 companies, interest and royalties taken into account.
    - Conceivably could go to $1.25m, even though no real economic change.
- Should legislation give you some benefit?
- How should accounting recognize?

Carryover Credits Under Camp

SUTHERLAND

Assume $100 million of current excess credits

Currently subject to a valuation allowance

Planning Example

Current Income

- $50m in royalties
- $50m in dividends
- $10m in current Section 78 gross up
- $110m interest allocation
- Zero foreign source income, no OFL build up

Future Income

- $50m royalties
- $2.5m dividends
- No Section 78 gross up
- No interest allocation
- No baskets
- Would be able to use credits pretty quickly
- Might be able to reverse VA (but at 25%)

Carryover Credits Under Camp (cont'd)

SUTHERLAND

- What if no royalties (could not use all credits in carryover period)?
- What if you decide to do a loan and distribution – no interest netting, so no real penalty for loan, all E&P has been deemed repatriated so a return of capital?
  - Generate $10m of FSI from interest on loan.
- If the foreign company had retained its capital and simply dividended back $10 m in dividends per year, parent would only pay tax on $500,000 a year for 10 years.
  - What is book effect? Reverse $5m of VA.

APB 23 Elections

SUTHERLAND

Still may have some value

1. Book income, no cash.
2. Only tax on 5% deferred, and at a lower rate.
3. Trapped cash versus 5% taxable at 25%. Treasury concerns clearly going to weigh more heavily.
4. Rates can only go up.

Basis Collectors and Other Planning and New Law

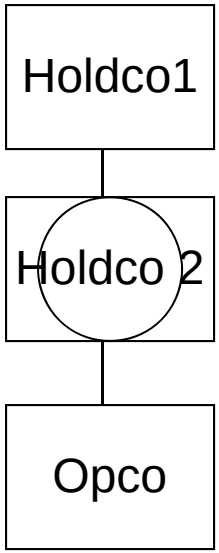

At one time you stripped money out of Holdco1 by borrowing and then paid off loan with distribution from Holdco 2.

Holdco1 now has a lot of low tax E&P which will be taxed at a 85% DRD.

Taxes and no book income or cash.

Section 331 liquidation if loss company.

Dividend or do a Section 304 into negative E&P Co. during 2012.

How is E&P Counted?

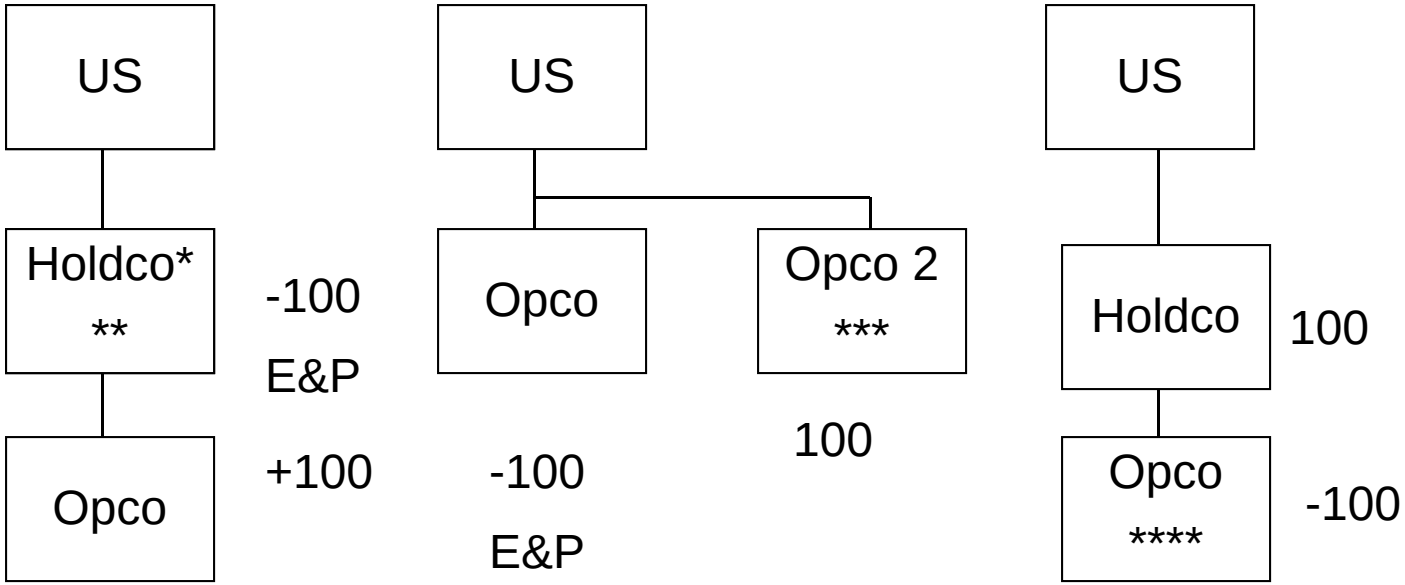

* What if look through does not apply?
** If done in 2013, how would nimble dividend be taxed?
*** Contribute and dividend in 2012.
**** Shift income.

Implications for Subpart F Regime

SUTHERLAND

- Generally no change to subpart F income categories, other than the anti-base erosion options.
  - Draft is silent on active finance exception and CFC look through rules.
  - Anti-base erosion rules will be considered before any liberalization of subpart F.
  - Incentive to repatriate.
  - Low tax FSI even if passive?
- Subpart F income is taxed under present rules, with sec. 960 and 901 credits.
- Section 959 (PTI) is repealed.
  - PTI dividends would be taxed if eligible for 95% DRD (note: individuals are not eligible).

Implications for Subpart F Regime

SUTHERLAND

- Other Subpart F changes:
  - Sec. 956 is repealed (allowing tax-free loans from CFCs to U.S. affiliates). U.S. source subpart F on interest earned.
  - Inter-CFC dividends are excluded from subpart F if they would be eligible for 95% DRD if paid up the chain to the U.S. shareholder.
    - Note: As under present law, dividends from a non-electing 10/50 company to a CFC would be treated as subpart F income.
    - Interest and royalty unclear.

Taxation of Subpart F Income Example

SUTHERLAND

Item	Present law at 35% rate	Camp at 25% rate
Subpart F income	100	100
Foreign tax	20	20
E&P	80	80
Deemed dividend	80	80
Sec. 78 gross-up	20	20
U.S. income inclusion	100	100
U.S. tax before FTC	35	25
Foreign tax credit	(20)	0
U.S. Tax After FTC	**3**	**2**
Actual dividend	80	96
Withholding tax	(8)	(8)
U.S. income inclusion	0	80
DRD (@ 95%) if qualified	N/A	(48)
Taxable income after DRD	0	0
U.S. tax before FTC	0	1
Foreign tax credit	(4)	N/A
U.S. Tax After FTC	**(31)**	**29.8**
Total U.S. Tax	**11**	**6**

No PTI; Bad Policy

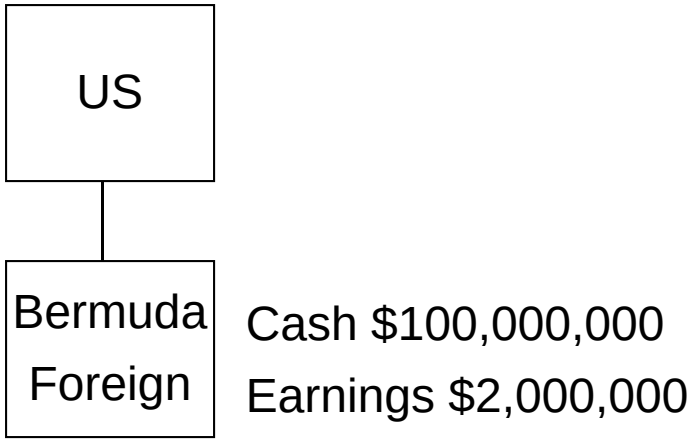

If active, 95% DRD.

No credits is not a big deal.

If passive, SubF 25% tax equals $500,000. Still no credit.

What if I dividend on 1/15 of the next year.

Since no PTI another $25,000 in tax.

Can estimate SubF. What if too much?

Portfolio Investment Regime

SUTHERLAND

- Dividends that do not qualify for the 95% DRD generally would be taxed as portfolio dividends, i.e., with a sec. 901 credit but without a sec. 902 credit.
- Examples of dividends taxed under the portfolio dividend regime are dividends received by:
  - Less than 10% shareholders.
  - 10% or more shareholders in:
    - 10/50 companies that are not treated as CFCs.
    - CFCs and 10/50 companies that do not meet the one-year holding period.

Foreign Tax Credit Simplification

SUTHERLAND

- FSI that does not qualify for the 95% DRD would remain taxable, with FTCs to the extent allowable under sec. 901 and 960.
- The FTC would be simplified by elimination of:
- Separate FTC baskets.
- Indirect (sec. 902) FTCs.
- Multi-year pooling of FTCs.
- PTI.
- Expense allocation of indirect expenses.
- Anti-splitter rules (sec. 909), and
- Deemed dividends from investment in US property (sec. 956).

Effective Date

SUTHERLAND

- Effective for tax years beginning after 2012, but doubtful it would be passed in 2012.
  - 2013 is possible. Such an effective date would make 2012 available for planning.
  - Will Congress do a blending type approach for 2013 OR WHATEVER THE YEAR OF PASSAGE IS E&P or will there be a cut off date.
  - Conceptually, if you know you want credit bring it up now. If very low taxed E&P or OFL, defer repatriation.
- Book hit in quarter of passage. As soon as 2nd quarter of 2013.
- Winners: OFL?
- Losers: Good FTC and cash repatriation planners.

Transition Rules

SUTHERLAND

- Pre-enactment E&P
  - All non-PTI E&P of 10% owned foreign companies as of the last tax year of the foreign company ending before [1/1/2013] would be included as subpart F income, at 35% (including 10% individual shareholders). Applies an **[85%]** sec. 965-style DRD and disallows [85%] of FTCs related to this subpart F inclusion.
  - Applies present law FTC rules.

- Excess FTC carryovers, if available, would offset the subpart F inclusion. NOLs are not clear.
  - Tax may be paid over eight years with an interest charge.

Transition Rules (cont'd)

SUTHERLAND

- All transition tax is due before 2021 (end of 10-year budget period). Congressional gimmick.
  - Tax is imposed regardless of whether the E&P is held in cash. Liquidity question.
- Pre-enactment FTC carryforwards would be preserved and usable as under present law.
- The discussion draft does not address:
  - ODLs, OFLs or DCLs.
  - Tax treaty implications.
  - Cross-border reorganizations.

Alternative Anti-Base Erosion Options

SUTHERLAND

- The draft says that anti-base erosion options have been included to "address concerns expressed by commentators that under a participation exemption system, U.S. companies would have an increased incentive to shift income to foreign jurisdictions, especially through the migration of intangible property income."
- Three options are proposed:
  1. Administration's excess returns proposal without imposition of a separate FTC basket.
  2. Subpart F treatment of CFC income taxed at an ETR less than 10% (determined country-by-country); same-country exception for active income.
  3. "Carrot and stick option."

Alternative Anti-Base Erosion Options (cont'd)

SUTHERLAND

- Definitions:
- "Intangible income" is gross income from goods and services to the extent attributable to intangible property (IP), where IP is defined broadly as under sec 936(h)(3)(B).
- "Foreign intangible income" is intangible income derived from:
  - Property sold for use, consumption, or disposition outside the U.S.
  - Services provided with respect to persons or property outside the U.S.

Alternative Anti-Base Erosion Options (cont'd)

SUTHERLAND

- Stick: A new category of subpart F would be created for foreign base company intangible income (FBCII), which is intangible income of a CFC.
- The normal 13.5% high tax exception (90% of 60% of 25%) applies to FBCII.
- Carrot: A U.S. corporation may deduct [40%] of foreign intangible income earned:
  - Directly (e.g., as a result of exports or foreign-source royalties), or
  - Through a CFC to the extent attributable to foreign intangible income.

Thin Capitalization Rule

SUTHERLAND

- New interest expense deduction limitation to prevent base erosion where U.S. borrowings finance foreign operations eligible for the 95% DRD.
- Applies to U.S. corporations that own 10% or more voting shares of a foreign company that is a member of the same expanded affiliated group (determined based on 50% ownership).
- Disallowed interest is the lesser of the portion of net interest expense:
  - On excess of domestic leverage over worldwide leverage; and
  - In excess of [X] percent of adjusted taxable income (sec. i63(j)).
- Disallowed interest may be carried forward and reduces any sec. 163(j) disallowance.

Thin Capitalization Rule Example

SUTHERLAND

Limit based on adjusted taxable income

Taxable income before adjustments		1,000
Additions to taxable income:		900
Section 199	100	
Net interest expense	600	
NOL deduction	0	
Depreciation, amortization & depletion	100	
DRD (presumably excl. 95% DRD)	10	
Tax-exempt interest	10	
Other	80	

Limited based on worldwide leverage

Worldwide consolidation	
Debt:	
Worldwide	10,000
U.S.	6,000
Equity:	
Worldwide	10,000
U.S.	5,000
Debt-equity ratio:	
Worldwide	1.1

Thin Capitalization Rule Example (cont'd)

SUTHERLAND

Limit based on adjusted taxable income

Taxable income before adjustments		
Subtractions from taxable income:		(100)
Deductions disallowed under sec. 265	(10)	
Net capital loss	(10)	
Other	(80)	_____
Adjusted taxable income		1,800
Limited based on ATI (30%)		540
U.S. net interest expense		600
Excess U.S. interest expense		**60**

Limited based on worldwide leverage

Worldwide consolidation	
U.S.	1.2:1
Proportionate U.S. debt*	5,000
U.S. consolidation	
U.S. debt	6,000
Proportionate U.S. debt	(5,000)
Excess U.S. debt	1,000
Debt-to-equity differential %**	16.7%
Excess U.S. interest expense	**100**

Disallowed interest expense = 60

* Worldwide debt-equity-ratio multiplied by U.S. equity

** Excess U.S. debt divided by total U.S. debt

Camp Territorial Regime – Summary of FTC Limitation Amendment

SUTHERLAND

Foreign Source Income?	Present Law	Camp Draft – Territorial
CFC and electing 10/50 dividends	Yes	5% included
Other dividends	Yes	Yes
Subpart F	Yes	Yes
Excess Returns – Subpart F	N/A	Yes
Section 78 Gross Up	Yes	Yes (section 960 only)
Interest	Yes	Yes
Royalties	Yes	Yes (low rate?)
Sections 863(b)/862	Yes	Yes
Branch Income	Yes	5% included

Allocable to Foreign Source	Present Law	Camp Draft – Territorial
Interest Expense Apportionment	Asset Method	No
R&D Expense Apportionment	Sales or Income Method	No?
Stewardship Apportionment	Allocable	Generally No
Directly Allocable	Allocable	Allocable
Branch Losses	Yes	No

Blind Curve Ahead: Regulatory Guidance Outlook

What to Expect on the Regulatory Front?

SUTHERLAND

- Guidance under § 954, including regulations under §954(d) relating to contract manufacturing.
- Guidance under § 956, including regulations on the treatment of loans to related foreign partnerships.
- Regulations under § 964 on accounting method elections.
- Regulations under § 7701(*l*) regarding conduit financing arrangements.
- Guidance under § 367(a) (including final regulations under § 367(a)(5) regarding outbound asset reorganization).
- Regulations under § 367(d) (transfers of intangibles to foreign corporations).
- Guidance under § 6038B (information reporting of transfers by partnerships to foreign corporations).

Current International Regulations Issues (cont'd)

SUTHERLAND

- Regulations under § 7874, including final regulations on definition of "surrogate foreign corporation."
- Guidance under § 482, including final regulations relating to cost-sharing arrangements.
- Regulations under § 482 on global dealing operations.
- Rev. Proc. updating procedures for the Advance Pricing Agreement Program.
- Regulations under § 861 (allocation and apportionment of interest expense).
- Update of Rev. Proc. on procedures for taxpayers requesting competent authority assistance.
- Final regulations under § 384 to prevent use of related corporations to avoid § 304.

SUTHERLAND

CIRCULAR 230 DISCLOSURE: In order to comply with Treasury Department regulations, you hereby are informed that, unless otherwise expressly indicated, any tax advice contained in this document is not intended or written to be used, and cannot be used, for the purpose of (i) avoiding penalties that may be imposed under the Internal Revenue Code of 1986, as amended, or any other applicable tax law or (ii) promoting, marketing, or recommending to another party any transaction, arrangement, or other matter.

Contact Information

SUTHERLAND

Robert S. Chase II
robb.chase@sutherland.com
(202) 383-0194

Richard A. Hartnig
richard.hartnig@sutherland.com
(404) 853-8135